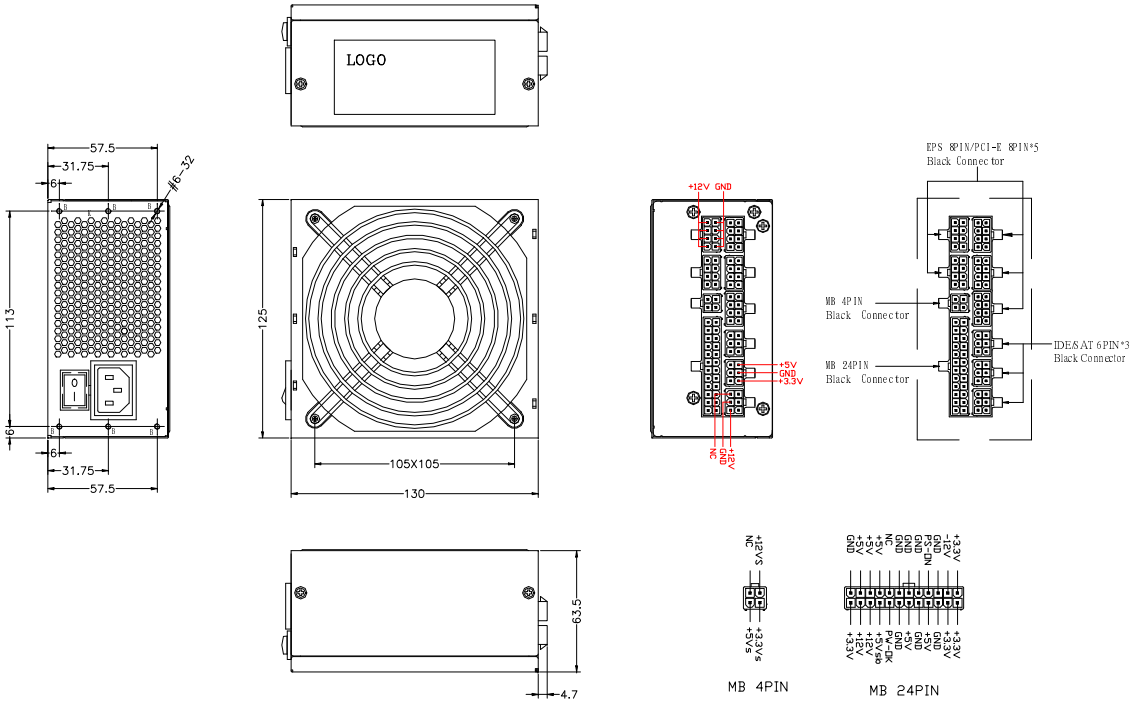
LOGO
57.5
31.75
6
φ6~32
113
125
105X105
130
63.5
4.7
+12V GND
+5V
GND
+3.3V
EPS 8PIN/PCI-E 8PIN*5
Black Connector
MB 4PIN
Black Connector
MB 24PIN
Black Connector
IDE&SAT 6PIN*3
Black Connector
MB 4PIN
MB 24PIN

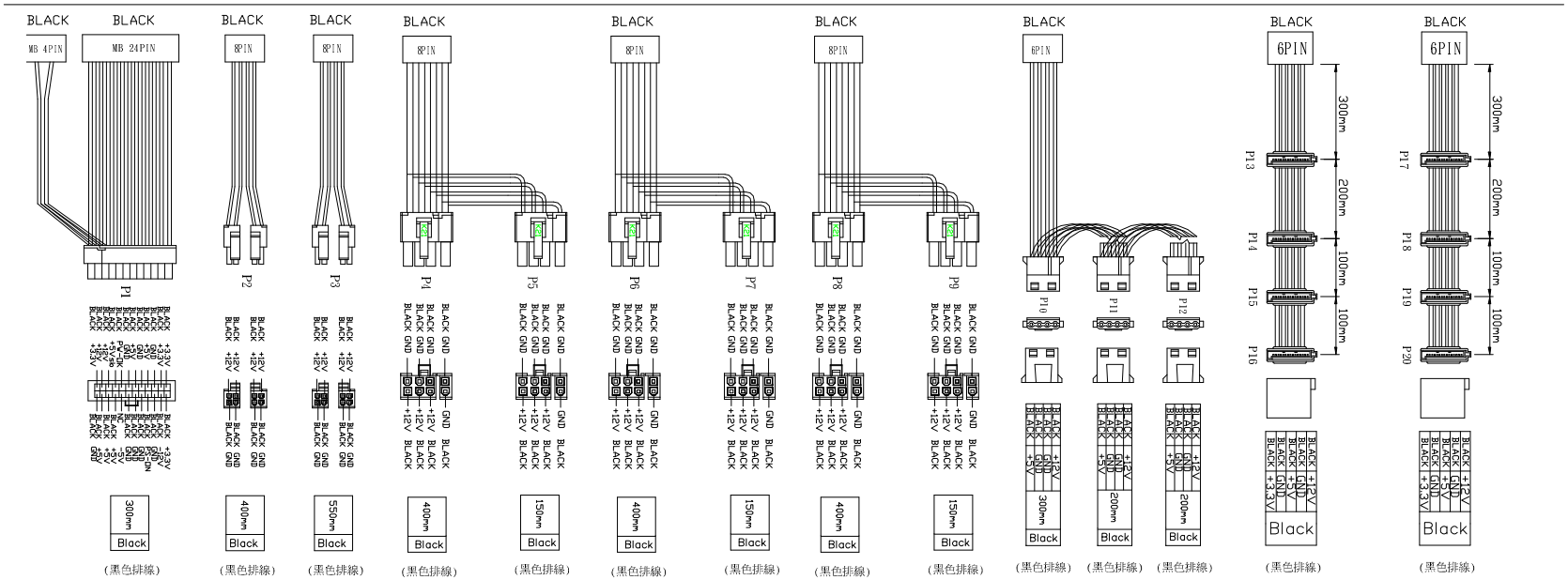
BLACK
MB 4PIN
MB 24PIN
8PIN
6PIN
P1
P2
P3
P4
P5
P6
P7
P8
P9
P10
P11
P12
P13
P14
P15
P16
P17
P18
P19
P20
300mm
200mm
100mm
Black
(黑色排線)