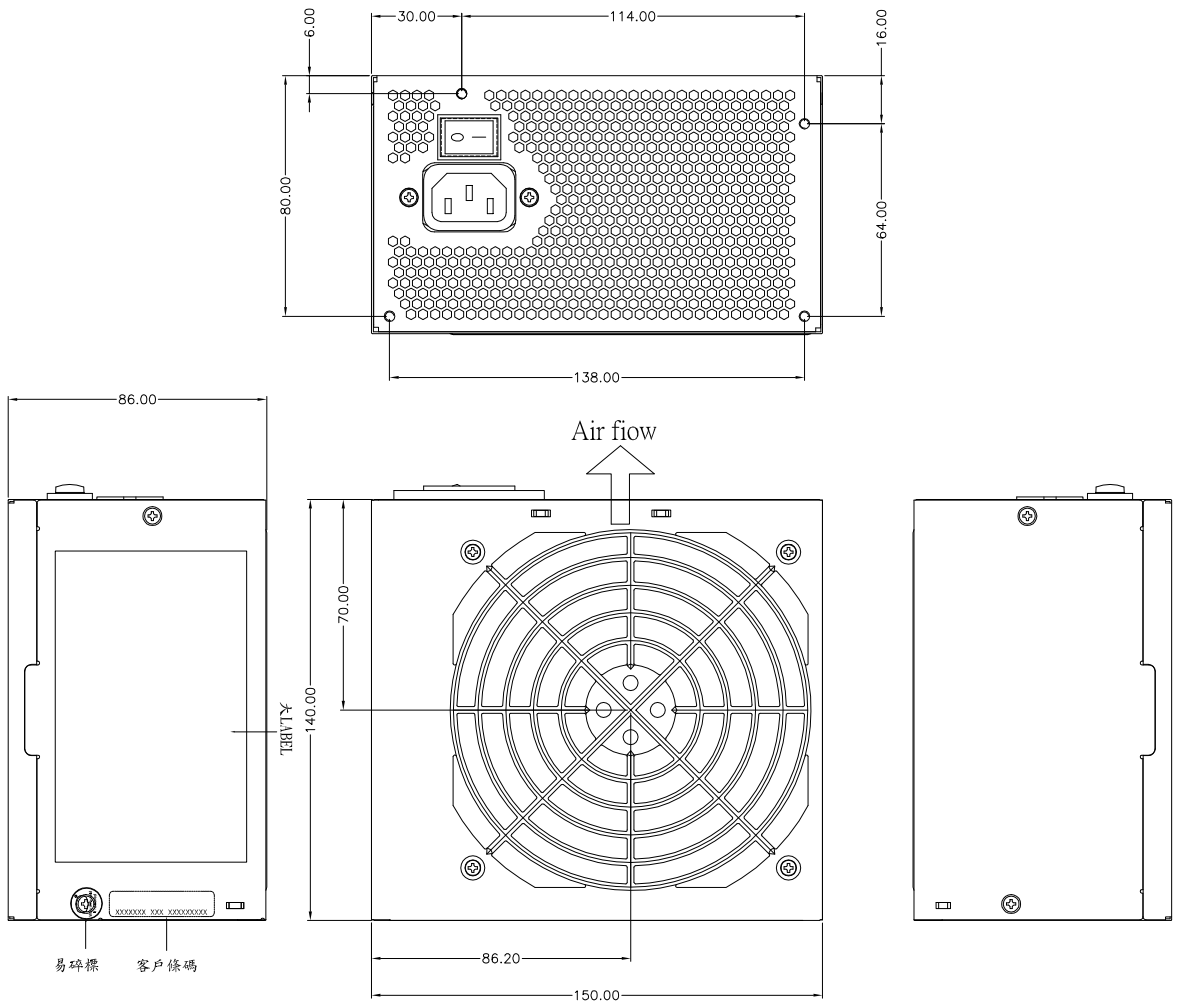

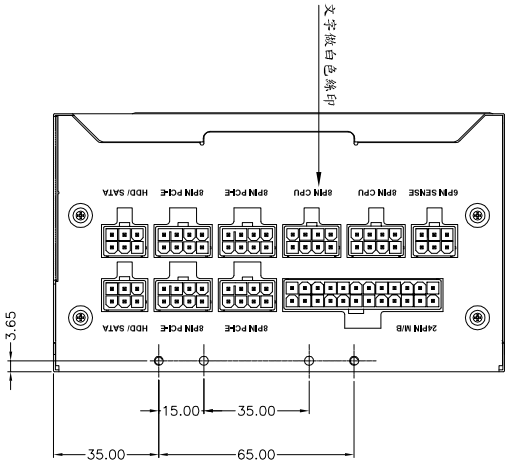

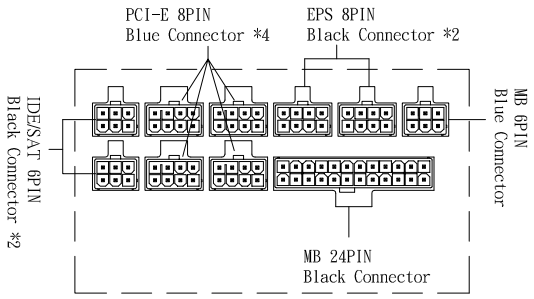

Enhance® ELECTRONICS CO.,LTD	TEXT: ATX3100				DRAWING NO:	
					ERP:	
REVISION:	DATE: 2018/06/28	DRAWN BY: MCJ	CHECKED BY:	APPROVED BY:	SCALE:	SHEET 1 OF 1