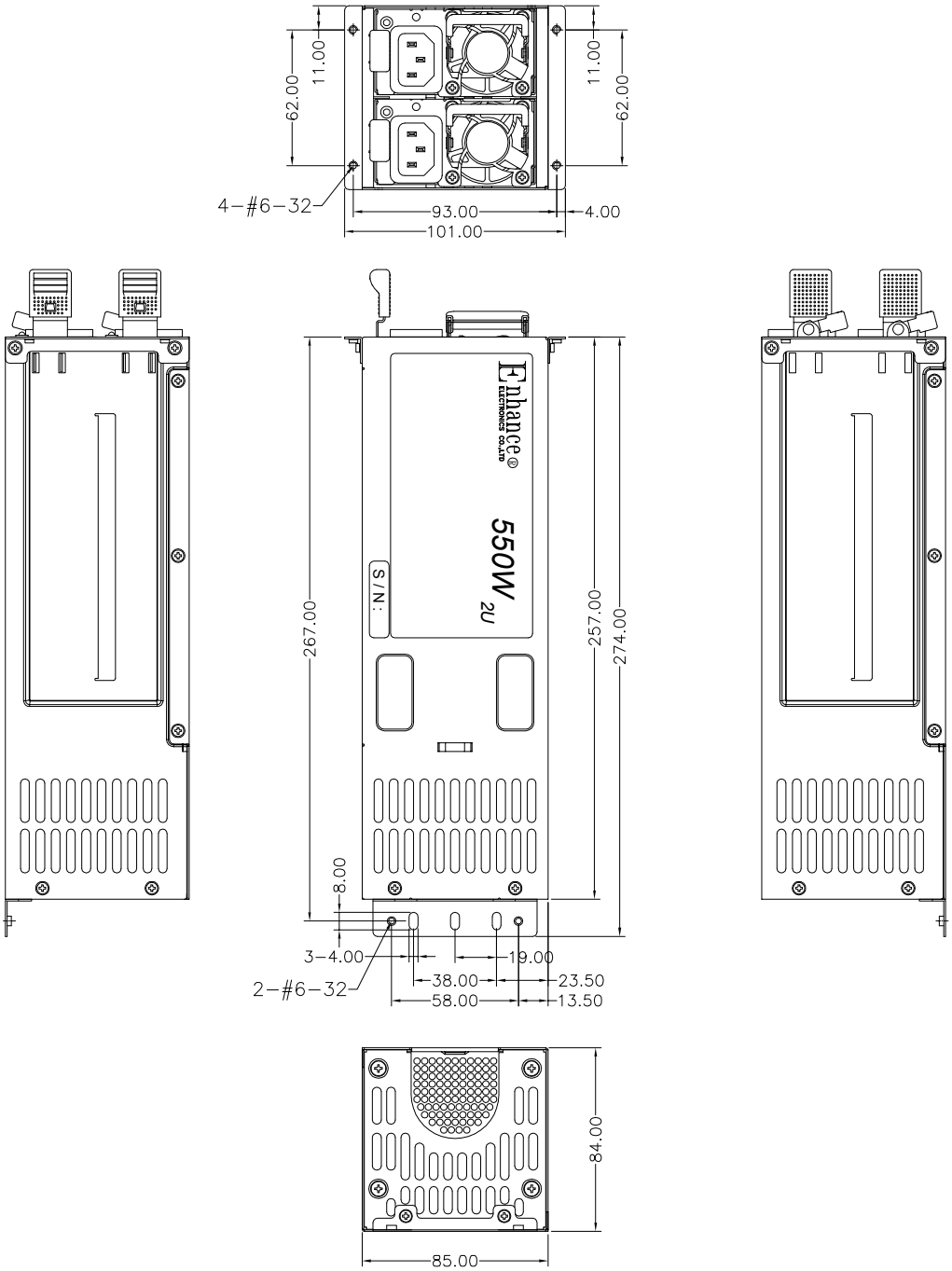
11.00
62.00
11.00
62.00
4-#6-32
93.00
4.00
101.00
Enhance ELECTRONICS CO.,LTD
550W 2U
S/N:
267.00
257.00
274.00
8.00
3-4.00
19.00
2-#6-32
38.00
23.50
58.00
13.50
84.00
85.00

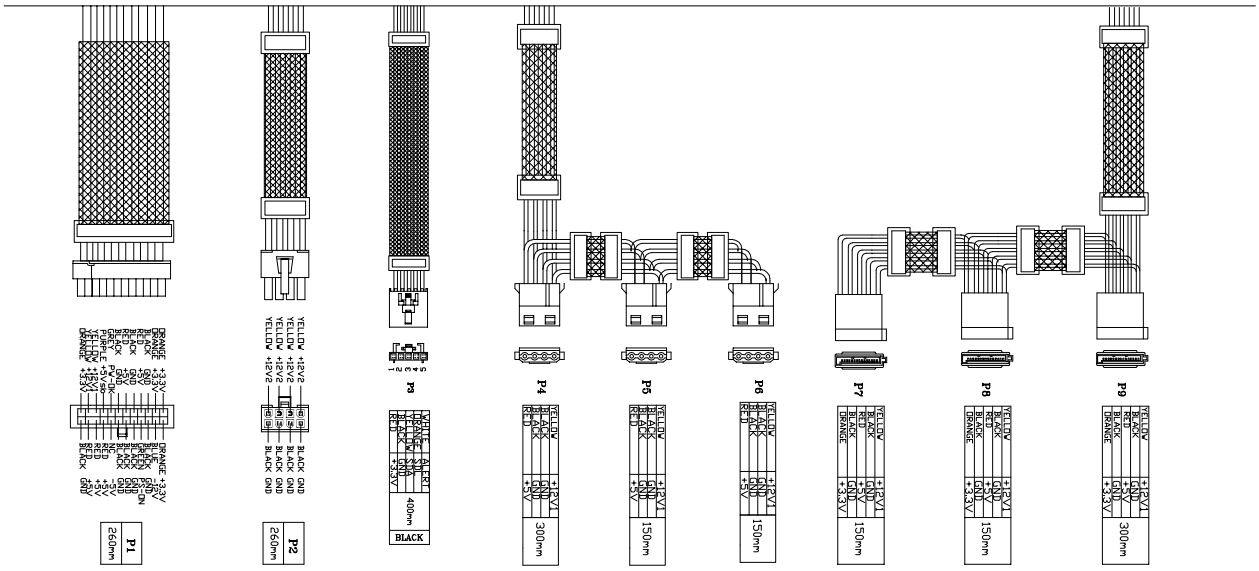
P1
260mm
P2
260mm
P3
400mm
BLACK
P4
300mm
P5
150mm
P6
150mm
P7
150mm
P8
150mm
P9
300mm